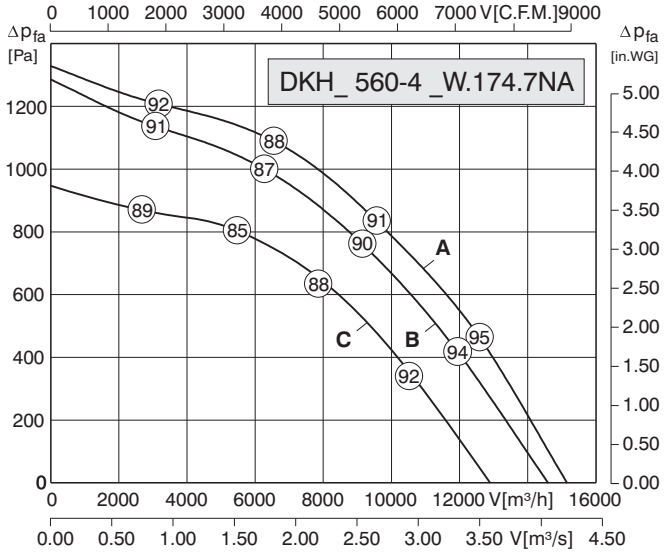
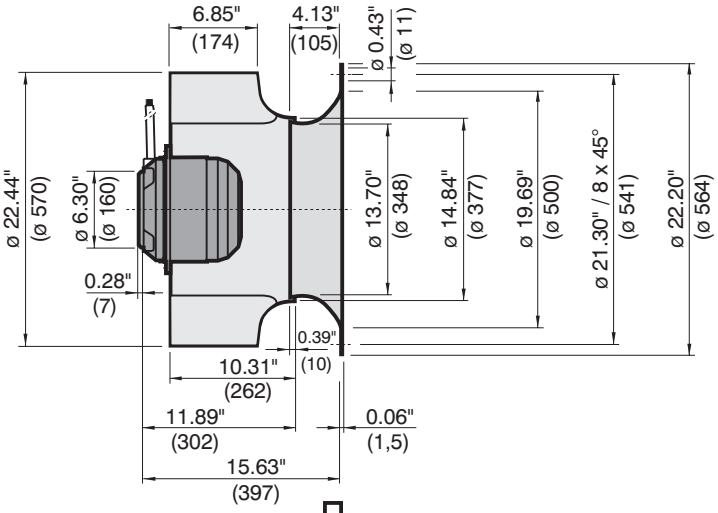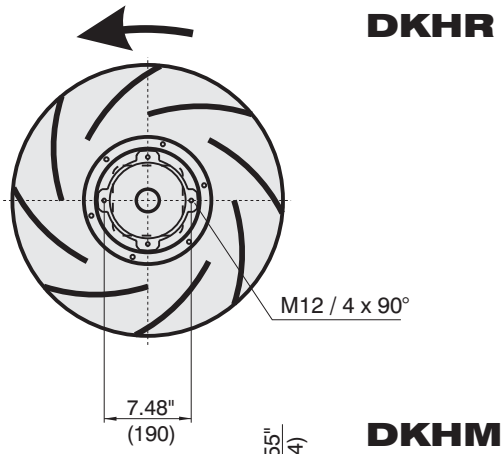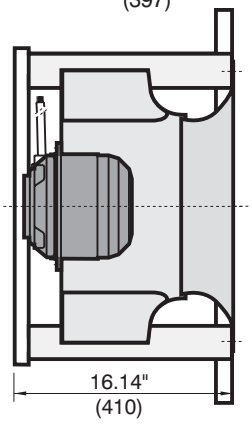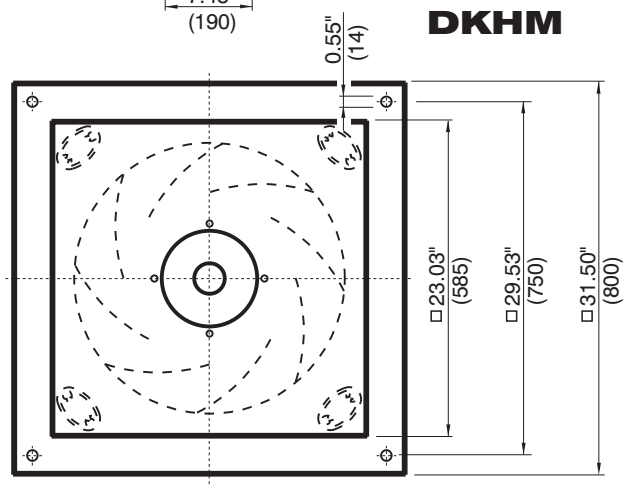
U [V]	f [Hz]	Curve	P_1 [kW]	I_N [A]	n [min^{-1}]	t_R [°F]	t_R [°C]	C [μF]	ΔI [%]	I_A / I_N	⚠	✱	[kg]
3 ~460 Y	60	A	4.80	7.20	1630	104	40	-	20	4.2	54	01.005	42/ 68.5
3 ~230 Δ	60	B	4.50	13.30	1520	104	40	-	13	4.2	54	01.006	42/ 68.5
3 ~400 Y	50	C	2.90	5.30	1400	122	50	-	25	4.8	54	01.005	42/ 68.5